CL.1 Single-lever bath mixer with stand pipe for free-standing assembly with hand shower set - Brushed Platinum

25 863 705 Product version from 7/1/2023

- 238mm projection
- rectangular spray pattern with 55 individual jets
- max. spout flow rate 24.6 l/min
- Hand shower: COMPACT RAIN, max. flow rate 6.8 l/min (at 3 bar)
- bar-type hand shower with anti-scale system
- wall bracket
- automatic bath/shower diverter
- total height 935 - 1005 mm
- stand pipe height 598 - 668 mm
- height up to aerator 852 – 922 mm
- push-on rosette 131 x 131 mm
- metal shower hose 1250mm with integrated anti-twist protection

Brushed Platinum	25 863 705-06
Chrome	25 863 705-00
Dark Chrome	25 863 705-19
Brushed Champagne (22kt Gold)	25 863 705-46
Champagne (22kt Gold)	25 863 705-47
Brushed Dark Platinum	25 863 705-99

Required miscellaneous

Concealed floor mounting - 35 945 970 90
- max. recess depth mm
- min. recess depth mm

CL.1 Single-lever bath mixer with stand pipe for free-standing assembly with hand shower set - Brushed Platinum

25 863 705 Product version from 7/1/2023

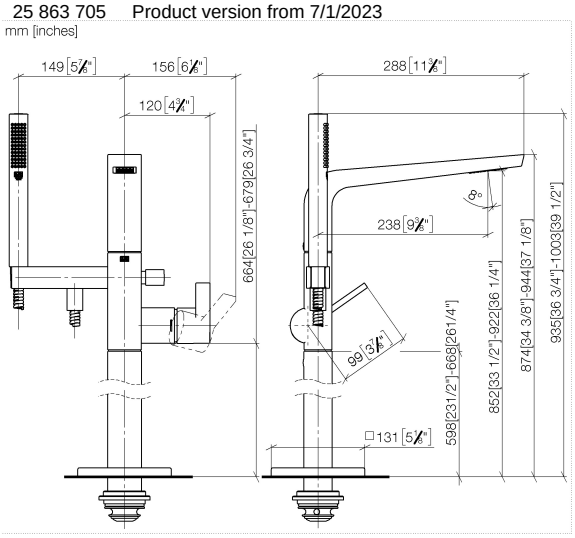

Flow rate chart

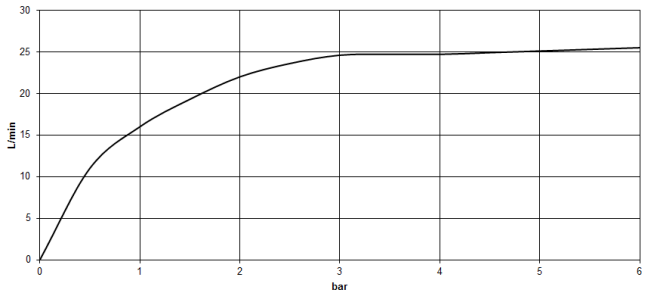

Codes & Standards

DIN 4109	EN 1717	ISO 3822	Ü-Zeichen

CL.1 Single-lever bath mixer with stand pipe for free-standing assembly with hand shower set - Brushed Platinum

25 863 705 Product version from 7/1/2023

Certificates

Belgaqua_19_77 LGA_29 Belgaqua_24-003-2

CL.1 Single-lever bath mixer with stand pipe for free-standing assembly with hand shower set - Brushed Platinum

25 863 705 Product version from 7/1/2023

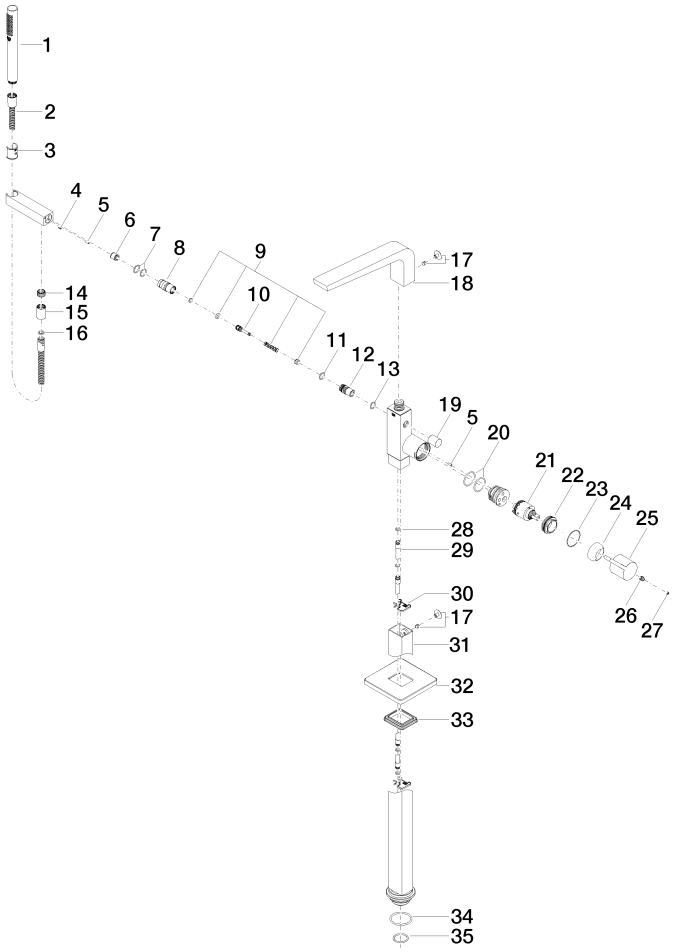

CL.1 Single-lever bath mixer with stand pipe for free-standing assembly with hand shower set - Brushed Platinum

25 863 705 Product version from 7/1/2023

Spare parts list

No.	Item Number	Name	Quantity used	Delivery time
1	90 12 11 140 41-06	shower	1	10
2	90 30 02 072 00-06	Metal shower hose 1/2" x 3/8" x 1250 mm - Brushed Platinum	1	10
3	09 18 40 118 90	sleeve	1	2
4	09 31 11 058 90	pin	1	2
5	09 31 11 040 90	pin	3	2
6	90 23 01 141 00 90	back-flow preventer	1	2
7	90 14 10 010 00 90	seal	2	2
8	09 24 03 130-00	nipple	1	10
9	90 16 02 023 00 90	spring	1	2
10	09 31 09 094 20-06	pull-rod	1	10
11	90 14 10 055 00 90	seal	1	2
12	09 21 34 080-06	nipple	1	10
13	90 14 10 033 00 90	seal	1	2
14	09 24 03 069 90	nipple	1	2
15	90 21 02 069 00-06	cover	1	10
16	90 14 20 026 00 90	seal	1	2
17	04 31 20 034 00 90	plug	2	2
18	90 11 70 008 00-06	spout	1	10
19	09 20 71 031-06	handle	1	10
20	09 14 10 148 90	seal	2	2
21	90 15 05 039 00 90	cartridge	1	2
22	09 24 04 298 90	nut	1	2
23	09 14 10 037 90	seal	1	2
24	09 28 30 036-06	cover	1	10
25	09 20 67 014-06	handle	1	10
26	90 31 11 030 00 90	pin	1	2
27	90 31 20 087 00-06	plug	1	10
28	09 14 10 139 90	seal	2	2
29	04 28 22 025 00 90	connection	2	2
30	09 20 93 051 90	holder	2	2
31	04 28 22 024 00-06	pipe	1	10
32	09 27 71 011-06	rosette	1	10
33	09 14 03 107 90	seal	1	2
34	09 14 10 084 90	seal	1	2
35	09 14 10 018 90	seal	1	2

We reserve the right to change designs, product range and technical specifications without prior notice.
More information can be found at: www.dornbracht.com +49 (0) 2371 8899 900 mail@dornbracht.com